SUNPOWER®

MORE ENERGY. FOR LIFE.™

E-SERIES COMMERCIAL SOLAR PANELS

- **20.4% efficiency**
  Captures more sunlight and generates more power than conventional panels.
- **High performance**
  Delivers excellent performance in real world conditions, such as high temperatures, clouds and low light.[1, 2, 3]
- **Commercial grade**
  Optimized to maximize returns and energy production, the E-Series panel is a bankable solution for commercial solar applications.

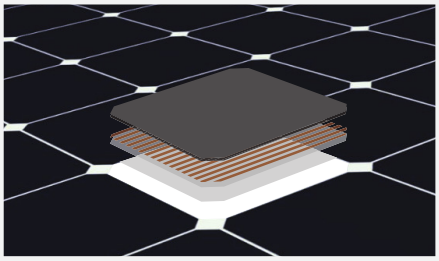

Maxeon® Solar Cells: Fundamentally better.
Engineered for performance, designed for reliability.

Engineered for peace of mind

Designed to deliver consistent, trouble-free energy over a very long lifetime.[4,5]

Designed for reliability

The SunPower® Maxeon Solar Cell is the only cell built on a solid copper foundation. Virtually impervious to the corrosion and cracking that degrade Conventional Panels.[4,5]

#1 Ranked in Fraunhofer durability test.[10]
100% power maintained in Atlas 25+ comprehensive PVDI Durability test.[11]

HIGH PERFORMANCE & EXCELLENT RELIABILITY

E20 - 327 PANELS

E20 SERIES

HIGH EFFICIENCY[6]

Generate more energy per square foot

E-Series commercial panels convert more sunlight to electricity producing 36% more power per panel,[1] and 60% more energy per square foot over 25 years.[3,4]

HIGH ENERGY PRODUCTION[7]

Produce more energy per rated watt

More energy to power your operations. High year one performance delivers 7-9% more energy per rated watt.[3] This advantage increases over time, producing 20% more energy over the first 25 years to meet your needs.[4]

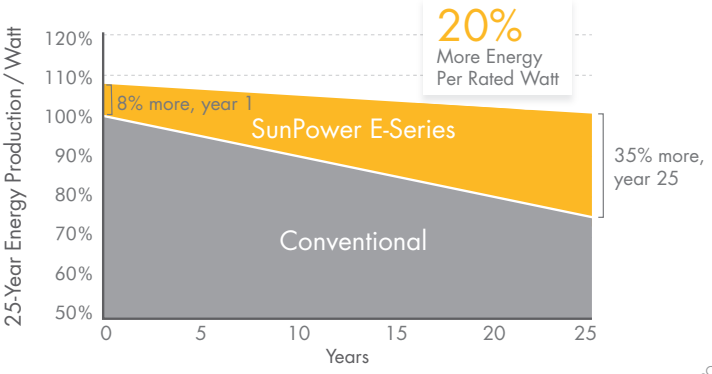

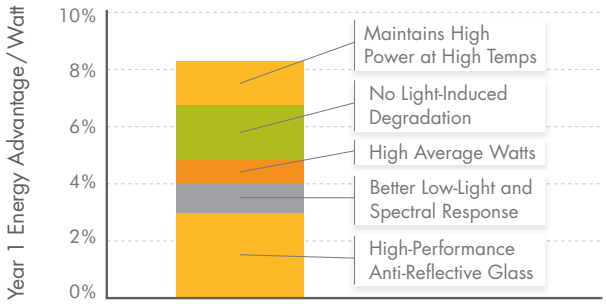

SUNPOWER 1ST PLACE 2012 PHOTON MODULE FIELD TEST

sunpowercorp.com

SUNPOWER

MORE ENERGY. FOR LIFE.™

E-SERIES COMMERCIAL SOLAR PANELS

SUNPOWER OFFERS THE BEST COMBINED POWER AND PRODUCT WARRANTY

POWER WARRANTY

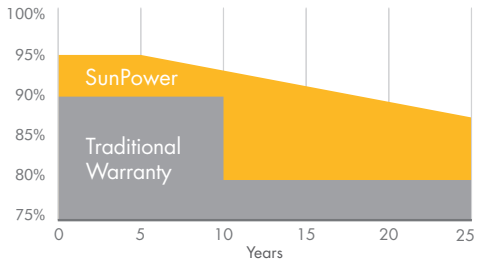

More guaranteed power: 95% for first 5 years, -0.4%/yr. to year 25.[8]

PRODUCT WARRANTY

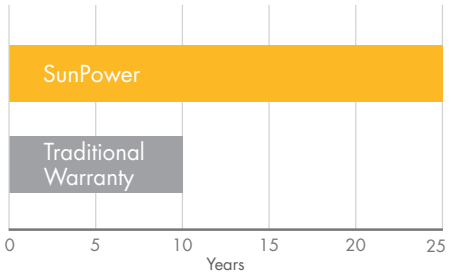

Combined Power and Product Defect 25 year coverage that includes panel replacement costs.[9]

ELECTRICAL DATA		
	E20-327-COM	**E19-310-COM**
Nominal Power[12] (Pnom)	327 W	310 W
Power Tolerance	+5/–3%	+5/–3%
Avg. Panel Efficiency[13]	20.4%	19.3%
Rated Voltage (Vmpp)	54.7 V	54.7 V
Rated Current (Impp)	5.98 A	5.67 A
Open-Circuit Voltage (Voc)	64.9 V	64.4 V
Short-Circuit Current (Isc)	6.46 A	6.05 A
Maximum System Voltage	1000 V UL & 1000 V IEC	
Maximum Series Fuse	20 A	
Power Temp Coef. (Pmpp)	–0.38% / °C	
Voltage Temp Coef. (Voc)	–176.6 mV / °C	
Current Temp Coef. (Isc)	3.5 mA / °C	

OPERATING CONDITION AND MECHANICAL DATA	
Temperature	– 40°F to +185°F (– 40°C to +85°C)
Max load	Wind: 50 psf, 2400 Pa, 245 kg/m² front & back Snow: 112 psf, 5400 Pa, 550kg/m² front
Impact resistance	1 inch (25 mm) diameter hail at 52 mph (23 m/s)
Appearance	Class B
Solar Cells	96 Monocrystalline Maxeon Gen II Cells
Tempered Glass	High Transmission Tempered Anti-Reflective
Junction Box	IP-65 Rated
Connectors	MC4 Compatible
Frame	Class 2 silver anodized
Weight	41 lbs (18.6 kg)

TESTS AND CERTIFICATIONS	
Standard tests	UL 1703, IEC 61215, IEC 61730
Quality tests	ISO 9001:2008, ISO 14001:2004
EHS Compliance	RoHS, OHSAS 18001:2007, lead-free, PV Cycle
Ammonia test	IEC 62716
Salt Spray test	IEC 61701 (passed maximum severity)
PID test	Potential-Induced Degradation free: 1000V [10]
Available listings	CEC, JET, KEMCO, MCS, FSEC, CSA, UL, TUV

REFERENCES:

1 All comparisons are SPR-E20-327 vs. a representative conventional panel: 240W, approx. 1.6 m², 15% efficiency.
2 PVEvolution Labs "SunPower Shading Study," Feb 2013.
3 Typically 7-9% more energy per watt, BEW/DNV Engineering "SunPower Yield Report," Jan 2013.
4 SunPower 0.25%/yr degradation vs. 1.0%/yr conv. panel. Campeau, Z. et al. "SunPower Module Degradation Rate," SunPower white paper, Feb 2013; Jordan, Dirk "SunPower Test Report," NREL, Oct 2012.
5 "SunPower Module 40-Year Useful Life" SunPower white paper, Feb 2013. Useful life is 99 out of 100 panels operating at more than 70% of rated power.
6 Out of all 2600 panels listed in Photon International, Feb 2012.
7 8% more energy than the average of the top 10 panel companies tested in 2012 (151 panels, 102 companies), Photon International, March 2013.
8 Compared with the top 15 manufacturers. SunPower Warranty Review, Feb 2013.
9 Some exclusions apply. See warranty for details.
10 5 of top 8 panel manufacturers were tested by Fraunhofer ISE, "PV Module Durability Initiative Public Report," Feb 2013.
11 Compared with the non-stress-tested control panel. Atlas 25+ Durability test report, Feb 2013.
12 Standard Test Conditions (1000 W/m² irradiance, AM 1.5, 25° C).
13 Based on average of measured power values during production.

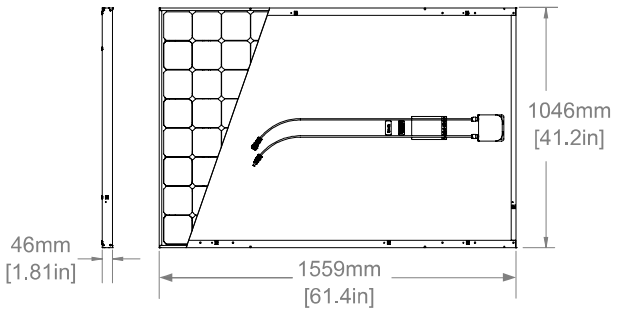

See http://www.sunpowercorp.com/facts for more reference information.
For further details, see supplementary specs: www.sunpowercorp.com/datasheets. Read safety and installation instructions before using this product.

© April 2013 SunPower Corporation. All rights reserved. SUNPOWER, the SUNPOWER logo, MAXEON, MORE ENERGY. FOR LIFE., and SIGNATURE are trademarks or registered trademarks of SunPower Corporation. Specifications included in this datasheet are subject to change without notice.